6 T 系列高压柱销式叶片泵
T Series Pin Vane Pumps with High Pressure

Products Introduction

This product use float side panel, vane of dowel pin structure, technics of double-edged vane and wholly new low noise technology cure to process stator. Compared with other dosing vane pump, its advantages are:

High working pressure – it can reduce the size of hydraulic actuator ,control valves and tubing, which makes for cutting the cost, you can also extend its working life by lowering the working pressure.

High efficiency – both volumetric and mechanical efficiency are higher than 94%,so it helps to raise productivity, reduce heating and running cost.

Smaller pressure fluctuation – it will reduce the noise of tubing and extend operating life of other hydraulic element.

High fouling resistance –using vane of double lips structure provides high fouling resistance and long operation life

Low noise – the vane structure of dowel pin which can decrease the force on the stator which comes from vane efficiently. We also adopt wholly new low noise technology stator, so it produces little noise. And the T*L series pumps with thicker body make for reducing mechanical amp litude and lower noise.

Wide speed range – combining pump core which has large displacement with smaller pump body to produce large displacement pumps with low noise.

In particular, this series of products is suitable for cutting machinery plastic machinery, leather machinery, pressing machinery, engineering machinery, metallurgical machinery and so on.

Application Specification

Initial Startup Checks Check the accuracy of design and installation of hydraulic station:

Make the distance between inlet and outlet as long as possible.

The pipe orifice of inlet and outlet should be slope and the section eagle should be greater than or equal to

45° , in order to increase passage section ,slower velocity, recommend velocity in inlet is between 0.5m/s and 1.9m/s. and in outlet is below 6m/s.

Confirm the oil ports are below the oil level in fuel tank in the worst-case scenario (example: all of hydraulic cylinder pistons are extending to the extreme position),

Specifications of the air filter should be threes greater than the maximum return flow.

Set the release valve for exhaust on oil returning pipe; and you can also slightly loosen the joint of pump outlet to vent until there are no bubbles in the oil spill, then you can tighten the joint to produce the same effect.

Notice: This method is suitable for low pressure and you should make sure the pressure will not rise.

Initial start:

Check the accuracy of the location of oil ports.

Pump should vent well when injecting oil.

Inching running the pump for a few seconds, and you should loosen the relief valve on the outlet to reach the minimum pressure.

Do not drive the pump in a high speed and pressure before the check is over.

Application Specification

Shaft&Coupling

Coupling&spline hole

Coupling spline hole should be able to float and automatically, such as coupling halves are rigid coupling, the different axis is less than 0.15mm (TIR), in order to reduce wear and inclination angle of two spline axis deviation < ±0.05/25.4mm;

Spline hole must be lubricated by molybdenum disulfide lithium-based grease or other similar grease.

Coupling demand heat treatment to reach the hardness of 29~45HRC.

The specification of spline hole should meet the one-level standards in SAE-J498b(1971) ,as the coordination is flat root and lateral teeth.

Flat spline shaft

T7, T67 and T6 series vane pumps provide a high strength key, hence you must use it when installing or changing the pump , or you can use a new key whose hardness is 27~34HRC and edge angle is 0.8~1×45° to avoid the circular angle in the key slot when it' necessary to change keys。

The load of shaft

The construction of requirement of flat spline shaft is the same to the spline shaft' s.

This series products is only allowed to bear transmission load, do not apply radial and axial load.

Application Specification

Hydraulic Fluid

Classification Of Hydraulic Fluid

HF-0、HF-2 : anti-wear hydraulic oil

HF-1 : common hydraulic oil

HF-3 : water in oil emulsion

HF-4 : water-glycol hydraulic fluid

HF-5 : synthetic hydraulic fluid

Recommended hydraulic Oil

We recommend anti-wear hydraulic oil for all the highest rated working parameter and performance parameter are based on the test using the anti-wear hydraulic.

Other Hydraulic Oil

When using other hydraulic oil, you should lower the Max. rated operating parameters of pump. in some situations, you have to raise the min. pressure of the inlet, and you can see related sections for details.

Viscosity

Uppermost Viscosity (cold start mode、low speed and pressure).....860cSt

Uppermost Viscosity (full speed and high pressure).....108cSt

Best viscosity (longest working time) 30cSt

Minimum viscosity (full speed and high pressure , for HF-1、HF-3、HF-4、HF-5) 18cSt

Minimum viscosity (full speed and high pressure , for HF-0、HF-2) 18cSt

Viscosity Index

The lowest index: 90V.L. high index can extent operating temperature range but it can also shorten the life of working liquid.

Application Specification

Operating Temperature

the operating temperature mainly depends on viscosity ,also it' s related to seal material, and for standard seals , its range is from -30℃ to 90℃。

Max. Temperature

HF-0、HF-1、HF-2.....+100℃

HF-3、HF-4.....+50℃

HF-5.....+70℃

Biodegradable hydraulic oil (organic grease and rapeseed oil-based grease)...+100℃

Min. liquid temperature (also depends on Max. viscosity)

HF-0、HF-1、HF-2、 HF-5.....-18℃

HF-3、HF-4.....+10℃

Biodegradable hydraulic oil(organic grease and rapeseed oil-based grease).....-20℃

Operating temperature and Viscosity

Operating temperature depends on the viscosity, variety of working liquid and property of pump. Usually ,we used the most suitable viscosity. And when the hydraulic pump cold start, drive it in conditions of low speed and low pressure to heat up the liquid to a suitable temperature, then operate it under full power.

Cleanliness of working fluid

Solid contamination level of oil is required to be lower than level 8 in NAS1618 (or ISO 18/14) and you can use the filter whose filtrate precision is 25 μm(orβ ≥ 100)

Solid contamination level should meet the need of Min. suction pressure. Recommended filter screen 100 mesh （149μm）, and you' d better enlarge the filter size or remove filter when the system demand cold start or using fire resistant oil.

Water pollution of working fluid

Mineral oil-based grease.....0.1%

Synthetic hydraulic fluid crank case oil and biodegradable hydraulic fluid.....0.05%

The system demand dehydration when moisture content is too high.

技术参数（单联泵） Technical parameters (single pump)

规格系列 Specifications Series	泵芯规格 PC specification	理论排量 Displacement q_t	最低转速 Min. speed	最高转速 Max. speed		最高压力 Max. pressure					
				HF-0 HF-1 HF-2	HF-3 HF-4 HF-5	HF-0,HF-2		HF-1,HF-4,HF-5		HF-3	
						间歇 Intermittent	连续 Continuous	间歇 Intermittent	连续 Continuous	间歇 Intermittent	连续 Continuous
		mL/r	r/min	r/min	r/min	bar	bar	bar	bar	bar	bar
T67B T7BL	B03	10.8	600	2800	1800	320	290	240	210	175	140
	B05	17.0									
	B06	21.2									
	B08	26.2									
	B10	34.0									
	B12	37.0		2500		300	275				
	B14	46.0									
	B17	58.0				280	240				
T6C T6CL	003	10.8	600	2800	1800	275	240	210	175	175	140
	005	17.0									
	006	21.2									
	008	26.2									
	010	34.0									
	012	37.0									
	014	46.0									
	017	58.0									
	020	63.5									
	022	70.0									
	025	79.0		2500							
	028	89.0				210	160		160		
	031	100.0									
T6D T7D T7DS T7DL	014	44.0	600	3000	1800	300	250	240	210	175	140
	017	55.0									
	020	66.0									
	022	70.3									
	024	81.1									
	028	90.0									
	031	99.2									
	035	113.4		2800		280					
	038	120.6									
	042	137.5		2500		260	230				
	045	145.7		2200		240	210	210	175		
	050	158.0				210	160		160		
T6E T7E T7ES T7EL	042	132.3	600	2200	1800	240	210	210	175	175	140
	045	142.4									
	050	158.5									
	052	164.8									
	054	171.0									
	057	183.3									
	062	196.7									
	066	213.3									
	072	227.1									
	085	268.7		2000		90	75	75	75	75	75

注：HF-0,HF-2= 石油基抗磨液压油；
HF-1= 石油基液压油（非抗磨）；
HF-3= 油包水乳化液；
HF-4= 水乙二醇；
HF-5= 合成液压油（磷酸脂液等）。

Note: HF-0、HF-2= Anti-wear hydraulic oil
HF-1= General hydraulic oil
HF-3= Water in oil emulsions
HF-4= Water glycol fluid
HF-5=Synthetic hydraulic fluid (phosphate ester etc.)

技术参数（双联泵） Technical parameters (Double pumps)

规格系列 Specifications Series	泵芯规格 PC specification	理论排量 Displacement q_i	最低转速 Min. speed	最高转速 Max. speed		最高压力 Max. pressure					
				HF-0 HF-1 HF-2	HF-3 HF-4 HF-5	HF-0,HF-2		HF-1,HF-4,HF-5		HF-3	
						间歇 Intermittent	连续 Continuous	间歇 Intermittent	连续 Continuous	间歇 Intermittent	连续 Continuous
		mL/r	r/min	r/min	r/min	bar	bar	bar	bar	bar	bar
T67BB T67CB T67DB T7DBS T7EBS T7BBL	B03	10.8	600	2200	1800	300	275	240	210	175	140
	B05	17.0									
	B06	21.2									
	B08	26.2									
	B10	34.0									
	B12	37.0									
	B14	46.0				280	240				
	B17	58.0									
T6CC T67CB T67DC T67EC T6DC T6EC T6CCL T7CBL	003	10.8	600	2200	1800	275	240	210	175	175	140
	005	17.0									
	006	21.2									
	008	26.2									
	010	34.0									
	012	37.0									
	014	46.0									
	017	58.0									
	020	63.5									
	022	70.0									
	025	79.0									
	028	89.0				210	160		160		
	031	100.0									
T7DBS T6DC T67DC T6ED T7EDS	014	44.0	600	2200	1800	250	210	240	210	175	140
	017	55.0									
	020	66.0									
	022	70.3									
	024	81.1									
	028	90.0									
	031	99.2									
	035	113.4									
	038	120.6									
	042	137.5									
	045	145.7						210	175		
	050	158.0				210	160		160		
T7EBS T6EC T6ED T7EDS	042	132.3	600	2200	1800	240	210	210	175	175	140
	045	142.4									
	050	158.5									
	052	164.8									
	054	171.0									
	057	183.3									
	062	196.7									
	066	213.3									
	072	227.1									
	085	268.7				90	75	75	75	75	75

注：HF-0,HF-2= 石油基抗磨液压油；
HF-1= 石油基液压油（非抗磨）；
HF-3= 油包水乳化液；
HF-4= 水乙二醇；
HF-5= 合成液压油（磷酸脂液等）。

Note: HF-0、HF-2= Anti-wear hydraulic oil
HF-1= General hydraulic oil
HF-3= Water in oil emulsions
HF-4= Water glycol fluid
HF-5=Synthetic hydraulic fluid (phosphate ester etc.)

技术参数（允许的最低吸口绝对压力 bar） Technical parameters (Allow the Min. Suction absolute pressure, bar)

规格系列 Specifications Series	泵芯规格 PC specification	转速 speed r/min									泵芯规格 PC specification
		1200	1500	1800	2100	2200	2300	2500	2800	3000	
B	B03	0.80	0.80	0.80	0.80	0.80	0.80	0.80	0.80	0.80	B03
	B05										B05
	B06										B06
	B08										B08
	B10									0.82	B10
	B12									0.85	B12
	B14							0.84	0.99	0.90	B14
	B17									1.13	B17
C	003	0.80	0.80	0.80	0.80	0.80	0.80	0.90	1.00		003
	005										005
	006										006
	008										008
	010										010
	012						0.85	0.92			012
	014							0.95			014
	017					0.85	0.90		1.03		017
	020										020
	022				0.85	0.90		0.98	1.05		022
	025				0.90	0.95	0.95	1.05			025
	028					0.98	0.98	1.08			028
	031				0.85	0.90	1.11	1.11			031
D	014	0.80	0.80	0.80	0.80	0.80	0.80	0.80	0.80	0.80	014
	017										017
	020								0.82	0.86	020
	022								0.83		0.88
	024								0.86		0.95
	028								0.88		1.00
	031								0.90		1.05
	035							0.84	0.97		035
	038							0.86	1.01		038
	042							0.90			042
	045			0.85	0.98	1.05					045
	050				1.02	1.09					050
E	042	0.80	0.80	0.80	0.90	1.00					042
	045										045
	050										050
	052										052
	054										054
	057			0.85	0.95						057
	062										062
	066	0.85	0.85	0.95	1.00	1.09					066
	072			0.85		1.05					072
	085	0.90	0.90	1.00							085

表中所列的数值是在以粘度为 10~65cSt 的石油基液压油为工作介质时，在吸口连接法兰处测得的绝对压力，吸口绝对压力相对于大气压的压差不得大于 0.2bar，以防止产生气穴。

对于 HF-3（油包水乳化液）和 HF-4（水乙二醇）吸口最低绝对压力应为上列数值乘以 1.25；对 HF-5（合成液压油）应乘以 1.35；而对于有机脂类或菜籽油基液压油，则应乘以 1.10。

对于双联泵，吸口绝对压力应以最大规格联的参数选取。

The values are listed in the table in the viscosity of 10 ~ 65cSt petroleum base hydraulic oil as working medium, the suction flange measure absolute pressure, suction absolute pressure relative to the atmospheric pressure differential pressure shall not be greater than 0.2bar, in order to prevent air pockets.

For HF-3 (water-in-oil emulsion) and HF-4 (water glycol fluid)

the Min. absolute suction pressure should be the above value multiplied by 1.25, for HF-5 (synthetic hydraulic oil) should be multiplied by 1.35, and for organic esters or rapeseed oil based hydraulic oil is multiplied by 1.10.

For double pumps, the suction pressure should be selected with the max. specification.

型号说明 Model Code

· **双联泵 Double Pumps**

T6CC	–022	–010	–1	R	00	–A	1	00

型号（示例） Model(example)
系列代号 Series Code

轴端泵排量规格 mL/r
Displacement of shaft end pump mL/r

盖端泵排量规格 mL/r
Displacement of cover end pump mL/r

轴 号 Form of drive shaft

旋转方向（从轴端看）
Direction of rotation(view from shaftend)
R- 顺时针（标准，可省略）Clockwise（Standard,
L- 逆时针 (counter clockwise)

油口组合方向：S= 进油口 P1、P2= 出油口
Ports directional combination : S= inlet P1,P2= outlet
详见 57 页

设计序号 Design number
A：由生产商给定 A：Given by the manufacturer

密封等级 (sealing class)
1：S1- 丁晴橡胶：石油基液压油（省略）
S1-NBR：petroleum base hydraulic oil（Omit）
5：S5-FPM：氟橡胶：石油基与抗燃液压油
S5-FPM：petroleum based and fire resistant hydraulic oil

油口联接螺纹：
Port connection threads:

其余规格
Other Specifications

公制 Metric	美制 US units
M0	00(略) Omit

T6CC

	公制 Metric units				美制 US units			
	0M	W0	1M	W1	00	01	10	11
S	3″（ϕ75)		$2\frac{1}{2}$″（ϕ63)		3″（ϕ75)		$2\frac{1}{2}$″（ϕ63)	
P1	1″（ϕ25)		1″（ϕ25)		1″（ϕ25)		1″（ϕ25)	
P2	1″ (ϕ25)	$\frac{3}{4}$″ (ϕ19)	1″ (ϕ25)	$\frac{3}{4}$″ (ϕ19)	1″ (ϕ25)	$\frac{3}{4}$″ (ϕ19)	1″ (ϕ25)	$\frac{3}{4}$″ (ϕ19)

T67BB、T67CB

	公制 Metric units		美制 US units	
	M0	M1	00	01
S	$2\frac{1}{2}$″（ϕ63)		$2\frac{1}{2}$″（ϕ63)	
P1	1″（ϕ25)		1″（ϕ25)	
P2	1″ (ϕ25)	$\frac{3}{4}$″ (ϕ19)	1″ (ϕ25)	$\frac{3}{4}$″ (ϕ19)

双联泵油口方向组合 Port direction combination of double pump

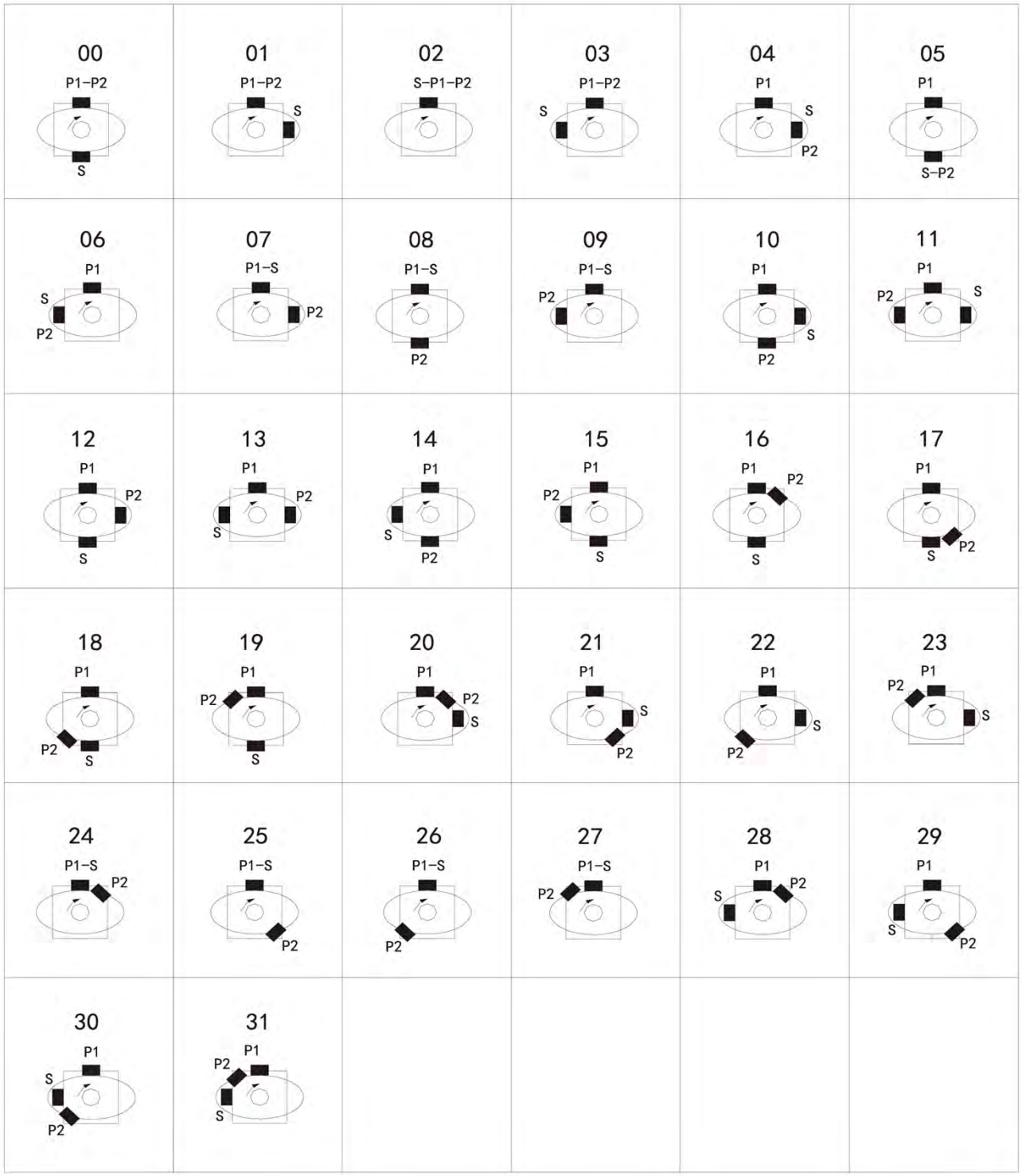

安装联接尺寸 Install Connection Dimensions

· T67BB、T67CB 双联泵 /T67BB、T67CB Double Pumps **重量 weight:26.0 kg**

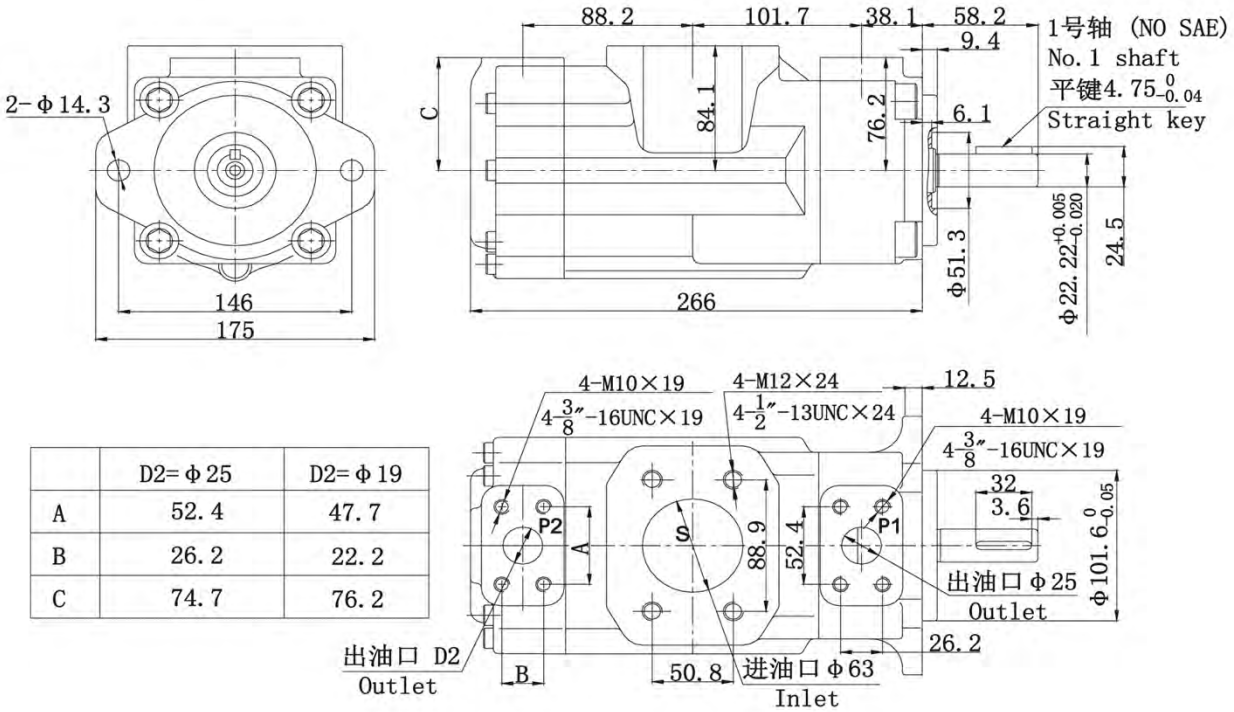

	D2=Φ25	D2=Φ19
A	52.4	47.7
B	26.2	22.2
C	74.7	76.2

5号轴
No5. Shaft

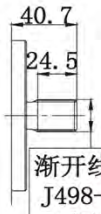

渐开线花键SAE B J498-b 1级精度 平齿根 齿侧配合 齿数 13 齿节 16/32 压力角 30° 大径 Φ21.8 0 -0.27	Involute spline SAE B J498-b Class 1 Flat root Side fit spline Number of teeth 15 Pitch 16/32 Pressure angle 30° Major diameter Φ21.8 0 -0.27

3号轴
No3. Shaft

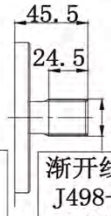

渐开线花键SAE BB J498-b 1级精度 平齿根 齿侧配合 齿数 15 齿节 16/32 压力角 30° 大径 Φ25	Involute spline SAE BB J498-b Class 1 Flat root Side fit spline Number of teeth 15 Pitch 16/32 Pressure angle 30° Major diameter Φ25 0 -0.27

2号轴(SAE BB)
No2. Shaft

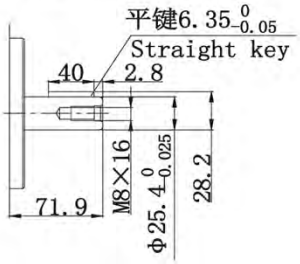

轴的最大扭矩 mL/r×bar
Max. torque of shaft mL/r×bar

轴号(Shaft NO.)	Σ(q×pmax)
1	14300
2	21420
3	32670
5	20600

安装联接尺寸 Install Connection Dimensions

· T6CC 双联泵 /T6CC Double Pumps **重量 weight:26.0 kg**

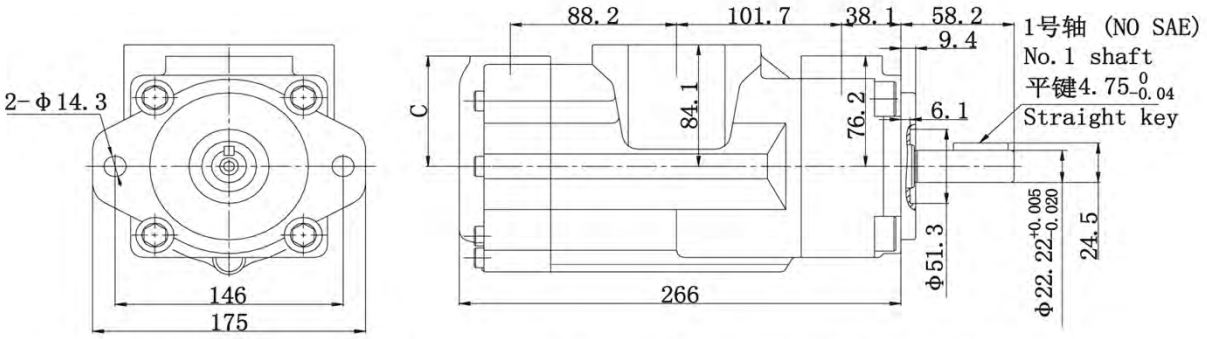

	D2=Φ25	D2=Φ19
A	52.4	47.7
B	26.2	22.2
C	74.7	76.2

	D=Φ75	D=Φ63
F	106.2	88.9
G	62	50.8

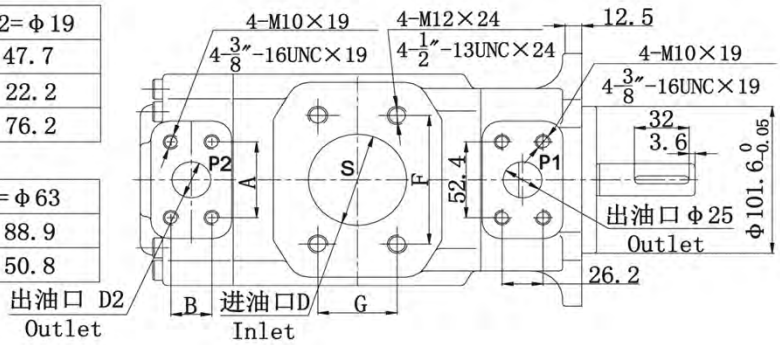

5号轴
No5. Shaft

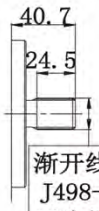

渐开线花键SAE B J498-b 1级精度 平齿根 齿侧配合 齿数 13 齿节 16/32 压力角 30° 大径 Φ21.8 0 -0.27	Involute spline SAE B J498-b Class 1 Flat root Side fit spline Number of teeth 15 Pitch 16/32 Pressure angle 30° Major diameter Φ21.8 0 -0.27

3号轴
No3. Shaft

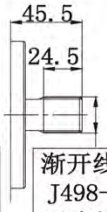

渐开线花键SAE BB J498-b 1级精度 平齿根 齿侧配合 齿数 15 齿节 16/32 压力角 30° 大径 Φ25 0 -0.27	Involute spline SAE BB J498-b Class 1 Flat root Side fit spline Number of teeth 15 Pitch 16/32 Pressure angle 30° Major diameter Φ25 0 -0.27

2号轴(SAE BB)
No2. Shaft

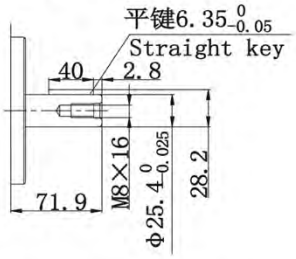

轴的最大扭矩 mL/r×bar
Max. torque of shaft mL/r×bar

轴号(Shaft NO.)	Σ(q×pmax)
1	14300
2	21420
3	32670
5	20600

安装联接尺寸 Install Connection Dimensions

· T67DB、T6DC、T7DBS、T67DC 双联泵　T67DB、T6DC、T7DBS、T67DC Double Pumps　重量 weight:38.6 kg

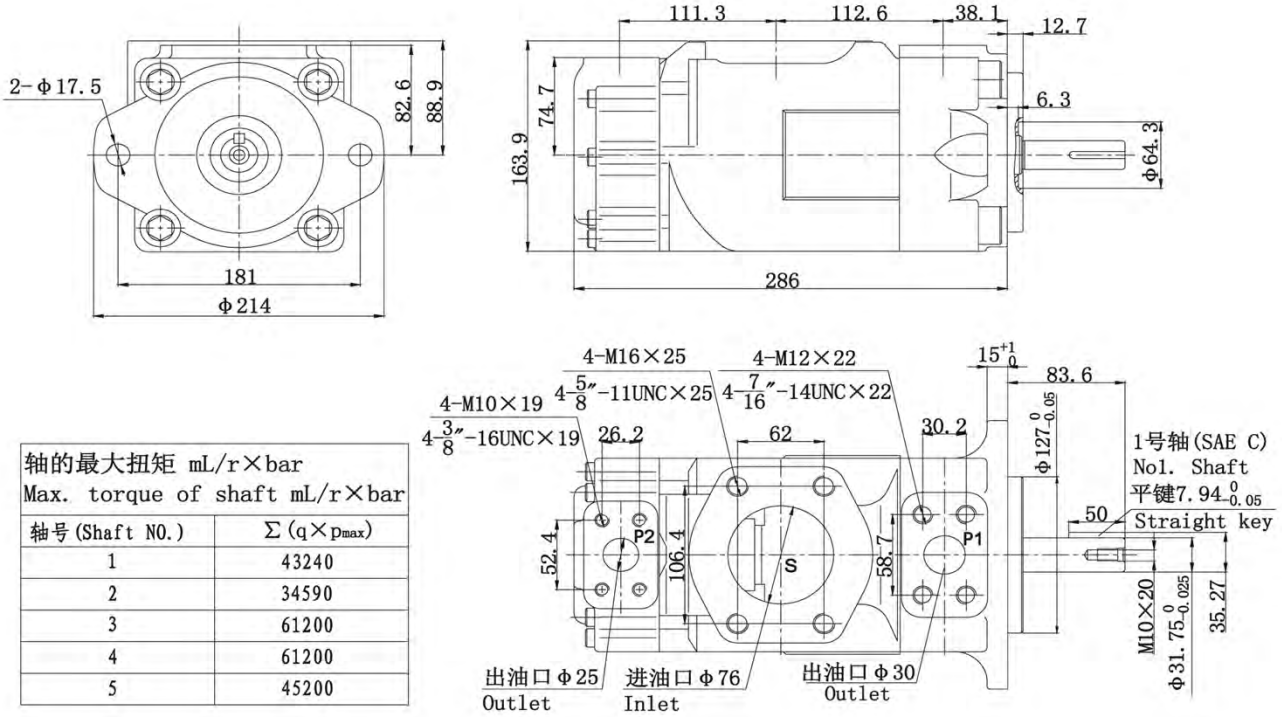

轴的最大扭矩 mL/r×bar Max. torque of shaft mL/r×bar	
轴号(Shaft NO.)	Σ(q×pmax)
1	43240
2	34590
3	61200
4	61200
5	45200

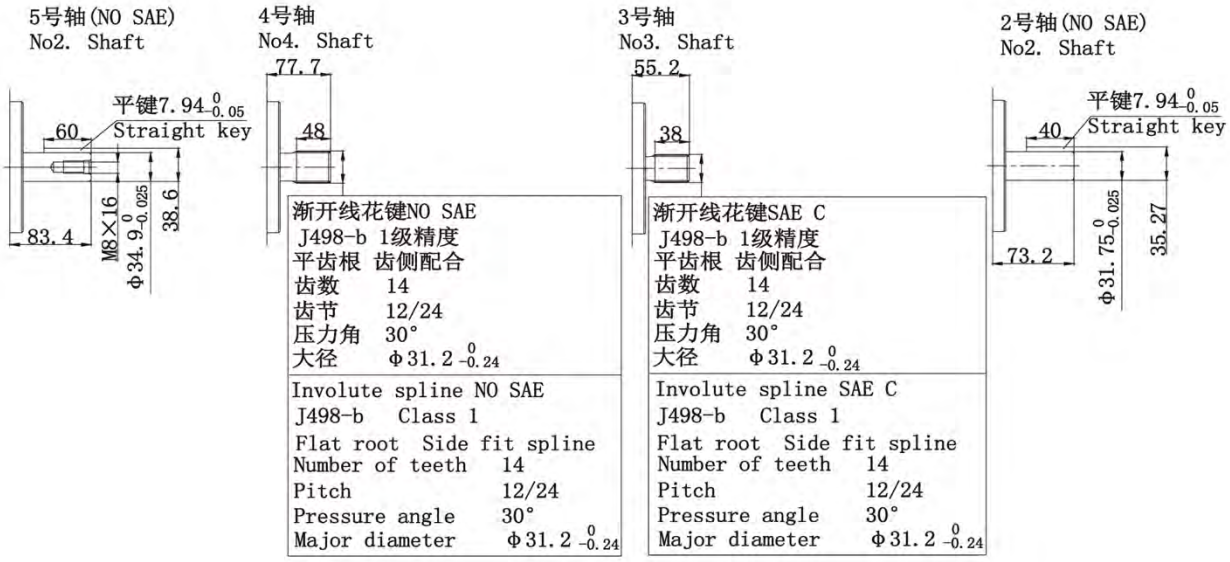

渐开线花键NO SAE	
J498-b 1级精度	
平齿根 齿侧配合	
齿数	14
齿节	12/24
压力角	30°
大径	Φ31.2 0 -0.24

Involute spline NO SAE	
J498-b Class 1	
Flat root Side fit spline	
Number of teeth	14
Pitch	12/24
Pressure angle	30°
Major diameter	Φ31.2 0 -0.24

渐开线花键SAE C	
J498-b 1级精度	
平齿根 齿侧配合	
齿数	14
齿节	12/24
压力角	30°
大径	Φ31.2 0 -0.24

Involute spline SAE C	
J498-b Class 1	
Flat root Side fit spline	
Number of teeth	14
Pitch	12/24
Pressure angle	30°
Major diameter	Φ31.2 0 -0.24

安装联接尺寸 Install Connection Dimensions

· T7EBS、T6EC 双联泵 /T7EBS、T6EC Double Pumps **重量 weight:55.0 kg**

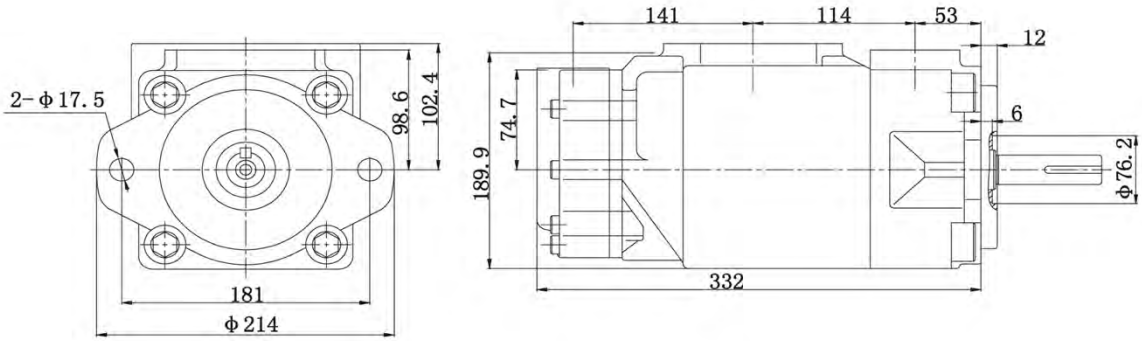

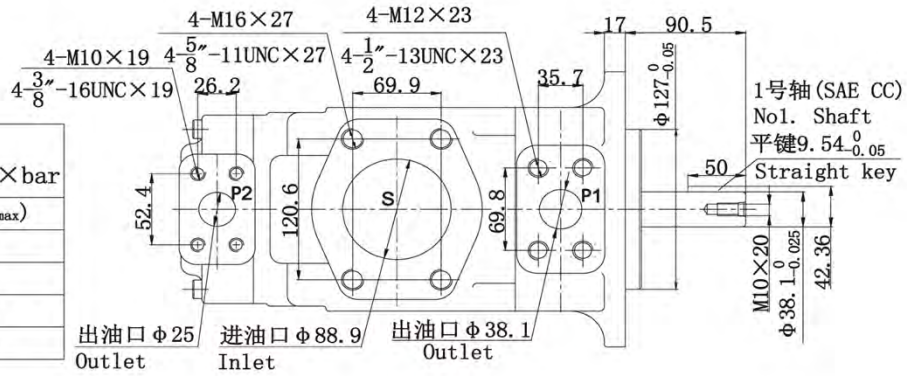

轴的最大扭矩 mL/r×bar Max. torque of shaft mL/r×bar	
轴号(Shaft NO.)	Σ(q×pmax)
1	54500
2	34590
3	61200
4	61200

4号轴
No4. Shaft

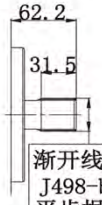

渐开线花键SAE CC J498-b 1级精度 平齿根 齿侧配合	
齿数	17
齿节	12/24
压力角	30°
大径	Φ37.56 0 -0.25
Involute spline SAE CC J498-b Class 1 Flat root Side fit spline	
Number of teeth	17
Pitch	12/24
Pressure angle	30°
Major diameter	Φ37.56 0 -0.25

3号轴
No3. Shaft

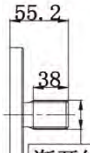

渐开线花键SAE C J498-b 1级精度 平齿根 齿侧配合	
齿数	14
齿节	12/24
压力角	30°
大径	Φ31.2 0 -0.24
Involute spline SAE C J498-b Class 1 Flat root Side fit spline	
Number of teeth	14
Pitch	12/24
Pressure angle	30°
Major diameter	Φ31.2 0 -0.24

2号轴(NO SAE)
No2. Shaft

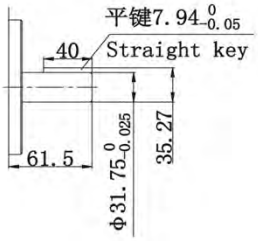

安装联接尺寸 Install Connection Dimensions

· T6ED、T7EDS 双联泵 /T6ED、T7EDS Double Pumps **重量 weight:66.0 kg**

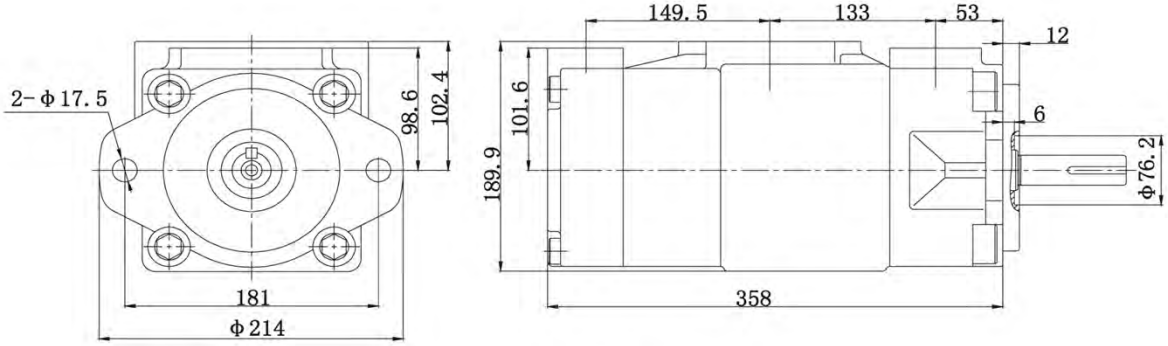

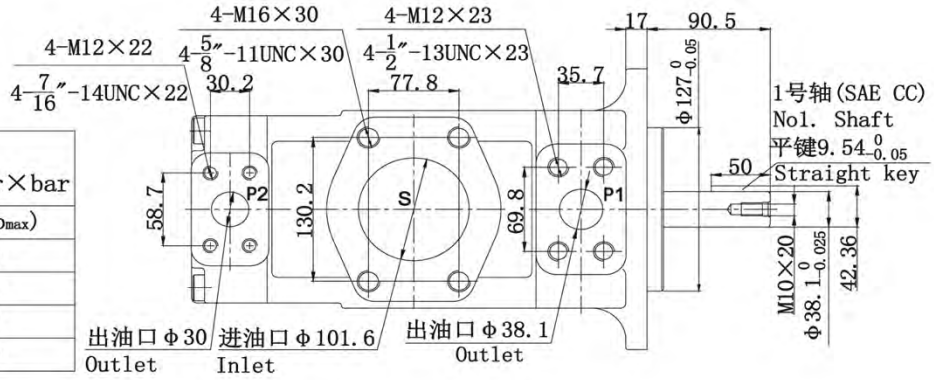

轴的最大扭矩 mL/r×bar Max. torque of shaft mL/r×bar	
轴号(Shaft NO.)	Σ(q×pmax)
1	54500
2	34590
3	61200
4	61200

4号轴
No4. Shaft

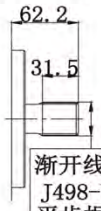

渐开线花键SAE CC J498-b 1级精度 平齿根 齿侧配合	
齿数	17
齿节	12/24
压力角	30°
大径	Φ37.56 0 -0.25
Involute spline SAE CC J498-b Class 1 Flat root Side fit spline	
Number of teeth	17
Pitch	12/24
Pressure angle	30°
Major diameter	Φ37.56 0 -0.25

3号轴
No3. Shaft

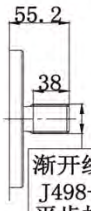

渐开线花键SAE C J498-b 1级精度 平齿根 齿侧配合	
齿数	14
齿节	12/24
压力角	30°
大径	Φ31.2 0 -0.24
Involute spline SAE C J498-b Class 1 Flat root Side fit spline	
Number of teeth	14
Pitch	12/24
Pressure angle	30°
Major diameter	Φ31.2 0 -0.24

2号轴(NO SAE)
No2. Shaft

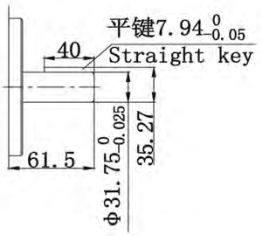

安装联接尺寸 Install Connection Dimensions

· T7BBL、T7CBL、T6CCL 双联泵　T7BBL、T7CBL、T6CCL Double Pumps　　**重量 weight:34.5 kg**

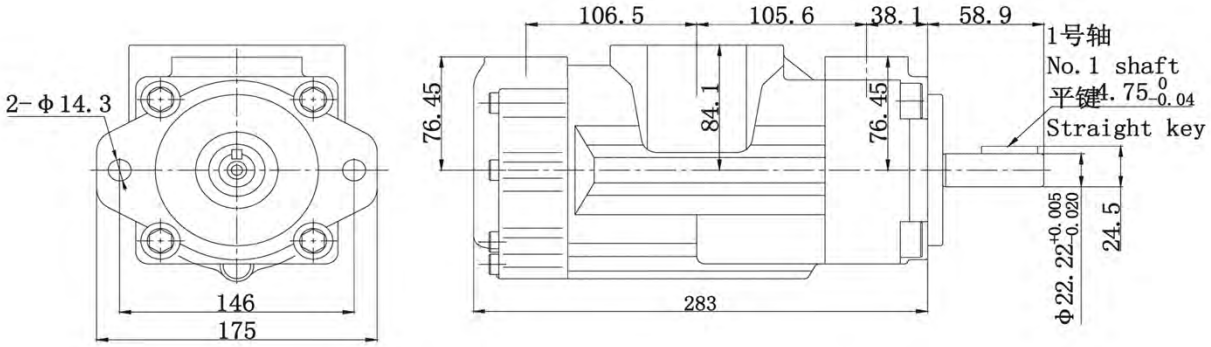

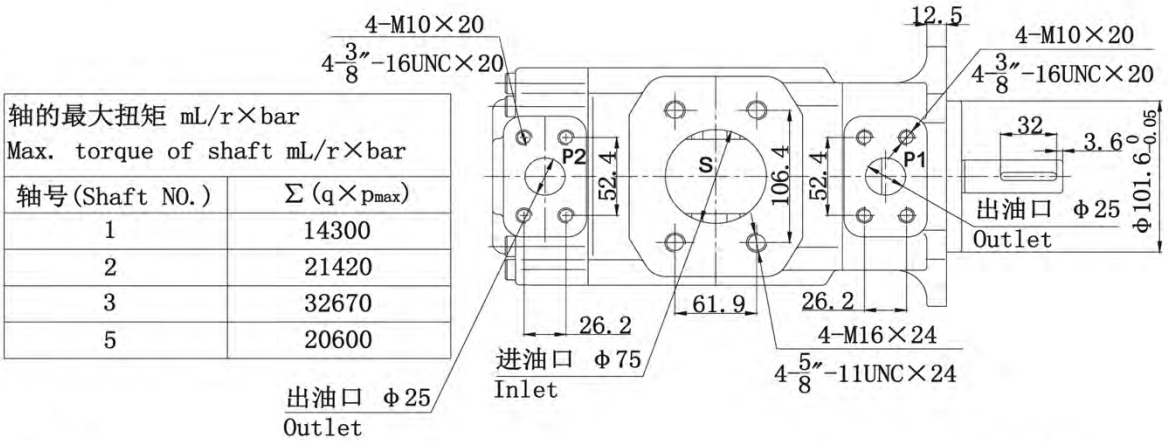

轴的最大扭矩 mL/r×bar Max. torque of shaft mL/r×bar	
轴号(Shaft NO.)	Σ(q×pmax)
1	14300
2	21420
3	32670
5	20600

5号轴
No5. Shaft

渐开线花键SAE B J498-b 1级精度 平齿根 齿侧配合	
齿数	13
齿节	16/32
压力角	30°
大径	Φ21.8 0 -0.27
Involute spline SAE B J498-b Class 1 Flat root Side fit spline	
Number of teeth	15
Pitch	16/32
Pressure angle	30°
Major diameter	Φ21.8 0 -0.27

3号轴
No3. Shaft

渐开线花键SAE BB J498-b 1级精度 平齿根 齿侧配合	
齿数	15
齿节	16/32
压力角	30°
大径	Φ25 0 -0.27
Involute spline SAE BB J498-b Class 1 Flat root Side fit spline	
Number of teeth	15
Pitch	16/32
Pressure angle	30°
Major diameter	Φ25 0 -0.27
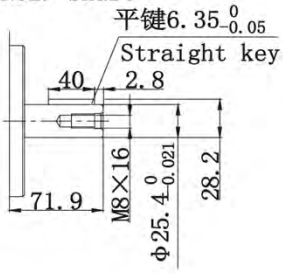
2号轴(SAE BB)
No2. Shaft